TO-8 Detector Package

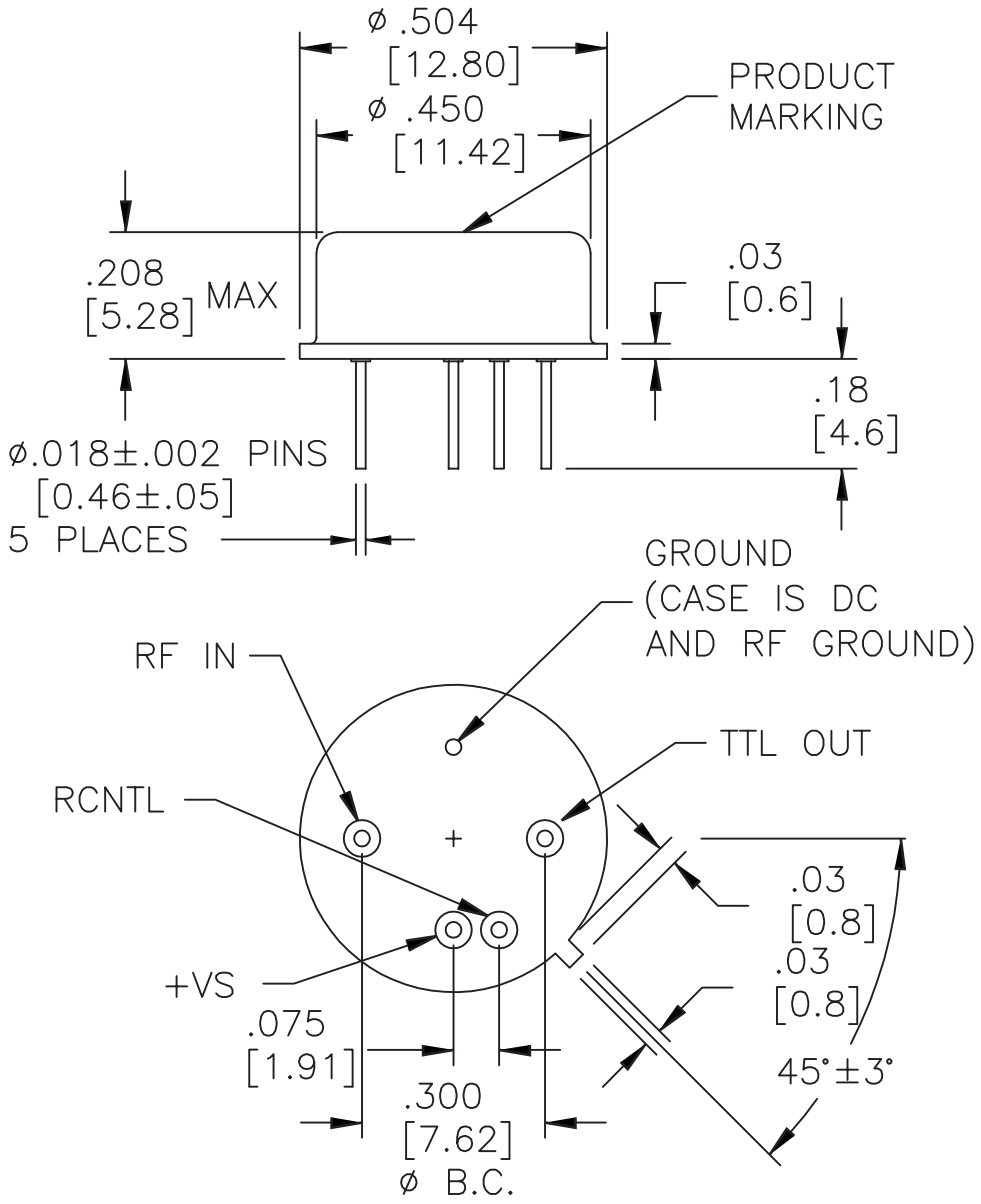

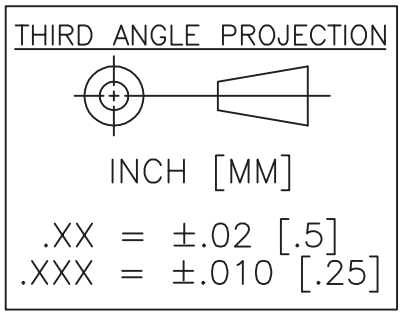

Teledyne Cougar • 408-522-3838 • 408-522-3839 fax
www.teledyne-cougar.com • cougar@teledyne.com